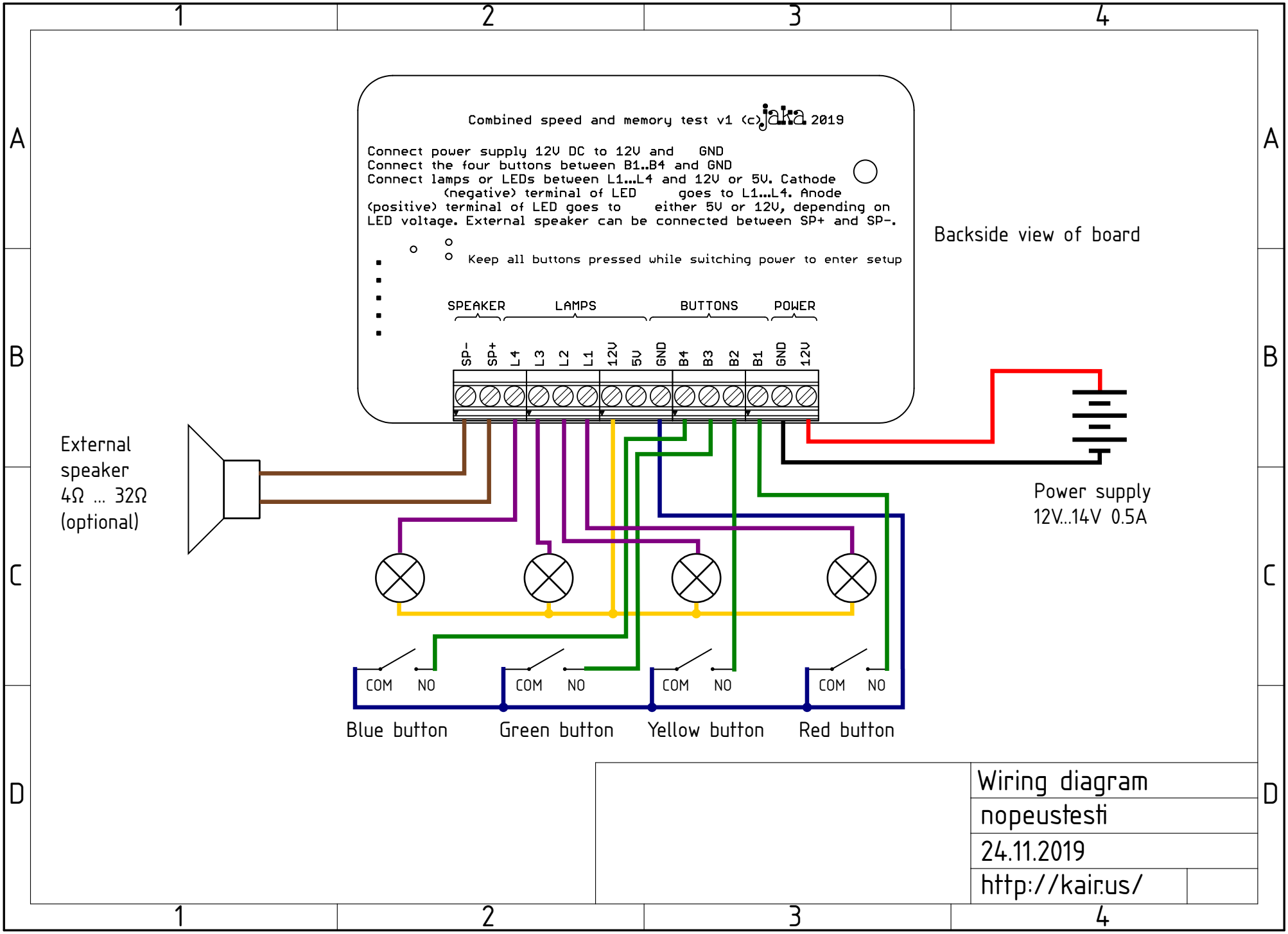
Combined speed and memory test v1 (c) jaka 2019
Connect power supply 12V DC to 12V and GND
Connect the four buttons between B1..B4 and GND
Connect lamps or LEDs between L1...L4 and 12V or 5V. Cathode (negative) terminal of LED goes to L1...L4. Anode (positive) terminal of LED goes to either 5V or 12V, depending on LED voltage. External speaker can be connected between SP+ and SP-.
Keep all buttons pressed while switching power to enter setup
SPEAKER
LAMPS
BUTTONS
POWER
SP- SP+ L4 L3 L2 L1 12V 5V GND B4 B3 B2 B1 GND 12V
Backside view of board
External speaker 4Ω ... 32Ω (optional)
Power supply 12V...14V 0.5A
COM NO
COM NO
COM NO
COM NO
Blue button
Green button
Yellow button
Red button
Wiring diagram
nopeustesti
24.11.2019
http://kair.us/