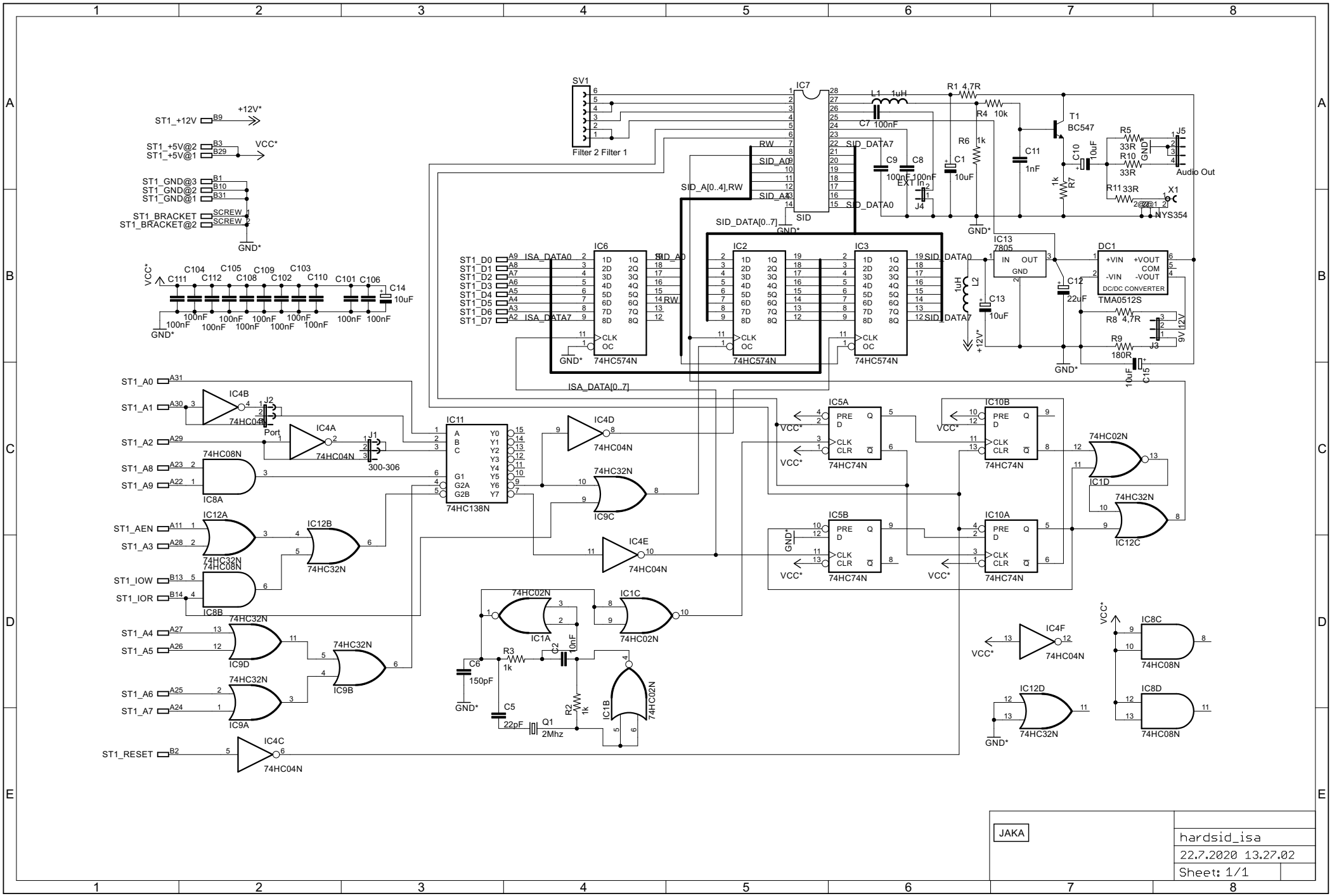
SV1
Filter 2 Filter 1
IC7
SID
L1 1uH
C7 100nF
R1 4,7R
R4 10k
R6 1k
T1
BC547
C11
1nF
C10
10uF
R5
33R
R10
33R
R11 33R
R7
1k
J5
Audio Out
X1
NYS354
C9
100nF
C8
100nF
EXT IN
J4
C1
10uF
GND*
SID_A[0..4],RW
SID_DATA[0..7]
SID_DATA7
SID_DATA0
IC6
IC2
IC3
74HC574N
ISA_DATA[0..7]
ISA_DATA0
ISA_DATA7
ST1_D0
ST1_D1
ST1_D2
ST1_D3
ST1_D4
ST1_D5
ST1_D6
ST1_D7
IC13
7805
IN
OUT
GND
C12
22uF
C13
10uF
L2
1uH
+12V*
DC1
+VIN
+VOUT
COM
-VIN
-VOUT
DC/DC CONVERTER
TMA0512S
R8 4,7R
R9
180R
J3
9V 12V
C15
10uF
VCC*
C104
C105
C109
C103
C111
C112
C108
C102
C110
C101
C106
C14
10uF
100nF
ST1_+12V
+12V*
ST1_+5V@2
ST1_+5V@1
VCC*
ST1_GND@3
ST1_GND@2
ST1_GND@1
ST1_BRACKET
ST1_BRACKET@2
SCREW
ST1_A0
ST1_A1
ST1_A2
ST1_A8
ST1_A9
ST1_AEN
ST1_A3
ST1_IOW
ST1_IOR
ST1_A4
ST1_A5
ST1_A6
ST1_A7
ST1_RESET
IC4B
74HC04N
J2
Port
IC4A
J1
300-306
IC11
74HC138N
IC8A
74HC08N
IC12A
74HC32N
IC12B
IC8B
IC9D
IC9B
IC9A
IC4C
IC4D
IC9C
IC4E
IC1A
74HC02N
IC1C
R3
1k
C2
10nF
C6
150pF
C5
22pF
Q1
2Mhz
R2
1k
IC1B
IC5A
IC5B
74HC74N
IC10B
IC10A
IC1D
IC12C
IC4F
IC12D
IC8C
IC8D
JAKA
hardsid_isa
22.7.2020 13.27.02
Sheet: 1/1