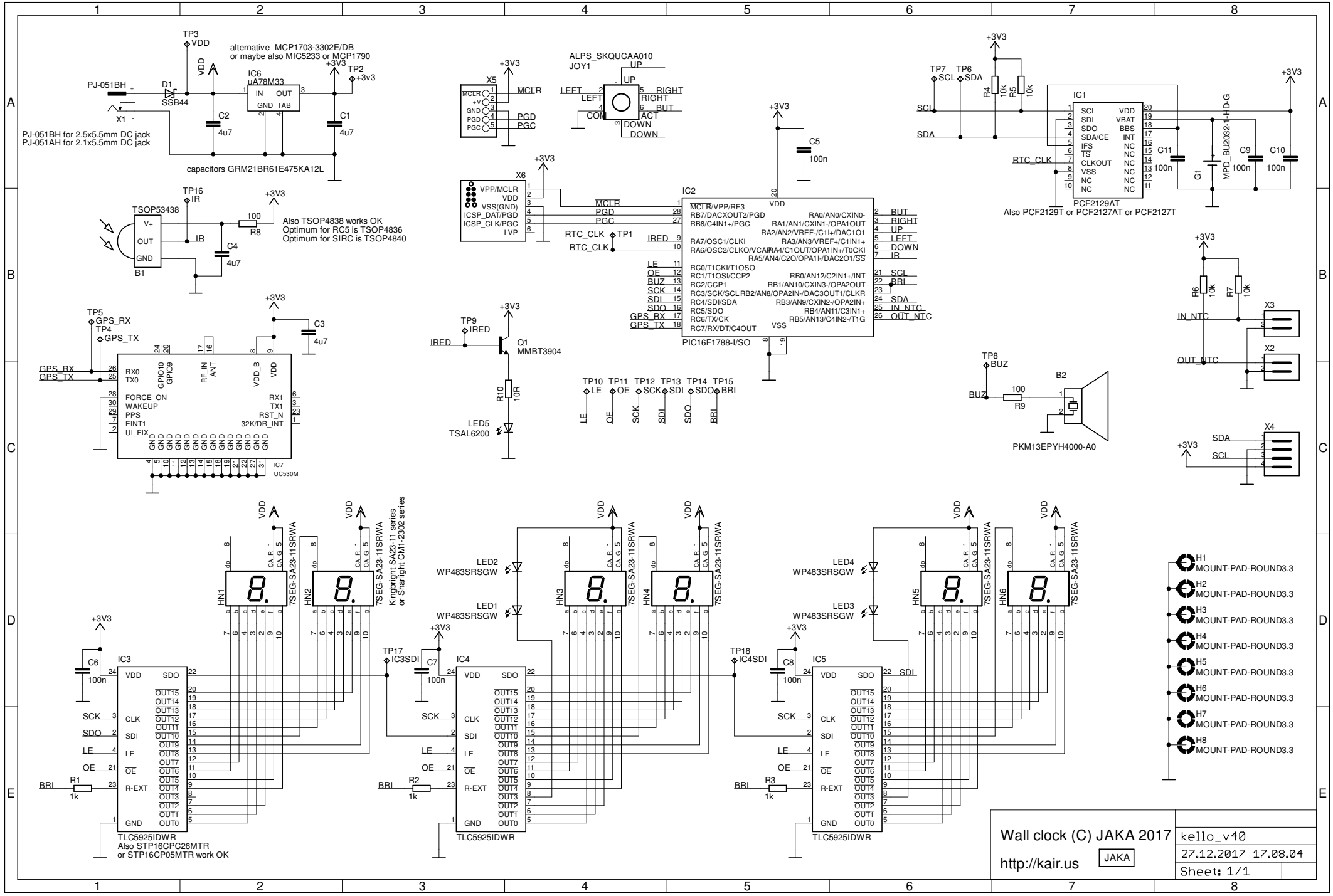
Wall clock (C) JAKA 2017
http://kair.us
JAKA
kello_v40
27.12.2017 17.08.04
Sheet: 1/1
PJ-051BH for 2.5x5.5mm DC jack
PJ-051AH for 2.1x5.5mm DC jack
alternative MCP1703-3302E/DB
or maybe also MIC5233 or MCP1790
IC6 uA78M33
capacitors GRM21BR61E475KA12L
ALPS_SKQUCAA010
JOY1
PCF2129AT
Also PCF2129T or PCF2127AT or PCF2127T
MPD_BU2032-1-HD-G
TSOP53438
Also TSOP4838 works OK
Optimum for RC5 is TSOP4836
Optimum for SIRC is TSOP4840
IC7 UC530M
PIC16F1788-I/SO
Q1 MMBT3904
LED5 TSAL6200
PKM13EPYH4000-A0
75EG-SA23-11SRWA
Kingbright SA23-11 series
or Sharlight CM1-2302 series
LED2 WP483SRSGW
LED1 WP483SRSGW
LED4 WP483SRSGW
LED3 WP483SRSGW
TLC5925IDWR
Also STP16CPC26MTR
or STP16CP05MTR work OK
MOUNT-PAD-ROUND3.3